RPM	MODELLO *MODEL*	PORTATA *FLOW*		PRESSIONE *PRESSURE*		POTENZA *POWER*		PESO *WEIGHT*	
		l/min	GPM	bar	PSI	HP	kW	Kg	
1450	MKC 13/28 S	13.0	3.4	280	4060	9.3	6.9	10.8	S = Albero Maschio 24 mm *S = Male Shaft 24 mm*
	MKC 15/24 S	15.0	4.0	240	3480	9.2	6.8	10.8	
	MKC 15/28 S	15.0	4.0	280	4060	10.8	7.9	10.8	
	NEW MKC 17/28 S	17.0	4.5	280	4060	12.2	9.0	10.8	
	MKC 18/24 S	18.0	4.8	240	3480	11.1	8.1	10.8	
	MKC 20/24 S	20.0	5.3	240	3480	12.3	9.0	10.8	
1750	MKD 4.0/30 S	15.0	4.0	200	2900	7.7	5.7	10.1	S = Albero Maschio 24 mm *S = Male Shaft 24 mm*
	MKD 4.0/40 S	15.0	4.0	280	4060	10.8	7.9	10.1	
	MKD 5.0/30 S	19.0	5.0	200	2900	9.7	7.2	10.1	
3400	MKL 4.0/35 W	15.0	4.0	240	3480	9.2	6.8	11.9	W = Albero Cavo 1" (con Flangia M01) W = Hollow Shaft 1" (with Flange M01)
	MKL 4.0/40 W	15.0	4.0	280	4060	10.8	7.9	11.9	
	MKL 5.0/35 W	19.0	5.0	240	3480	11.7	8.6	11.9	

Vedi pag. 38-39 - *See pag. 38-39*
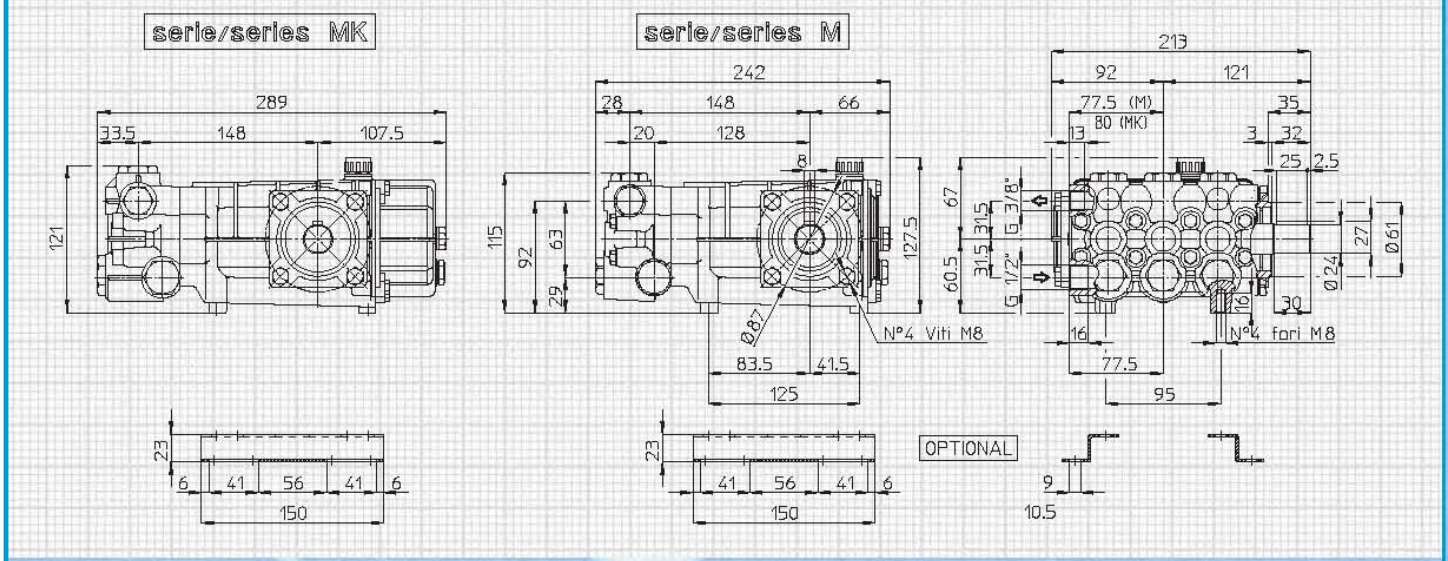
Dimensioni d'ingombro (mm) - *Overall Dimensions (mm)*